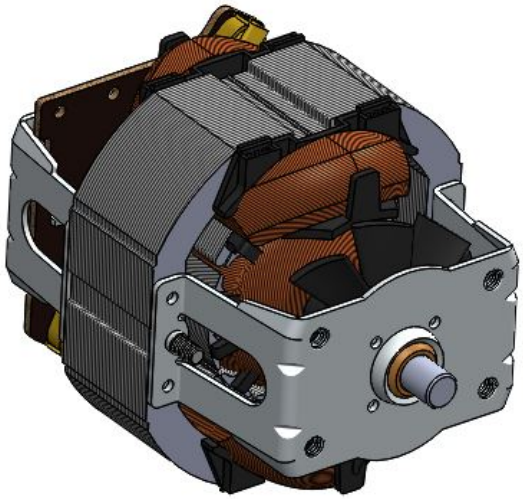

BALKAN MOTOR SANAYİ VE TİCARET A.Ş.
Since 1953

- Protection class: 0
- Insulation class: F
- Motor shaft: Ck 45.
- Cables: H05V-K 0.75mm² VDE approved
- Bearings: Sinter Bronze.

Universal Motor 230V (BM64S 964.94.015)

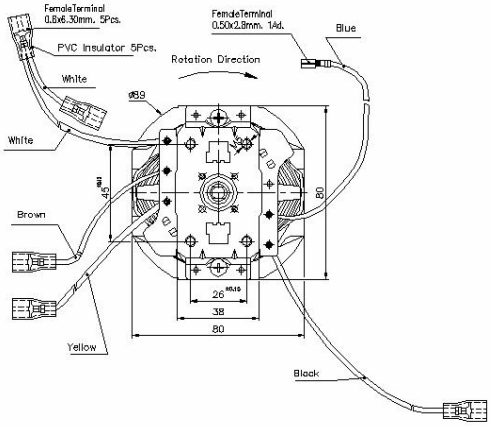

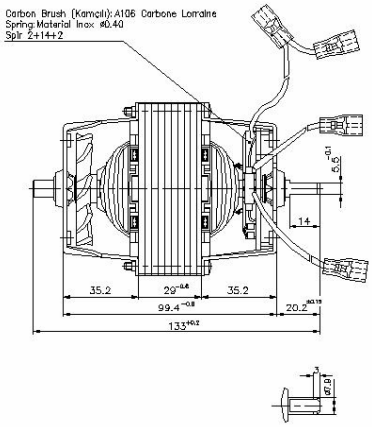

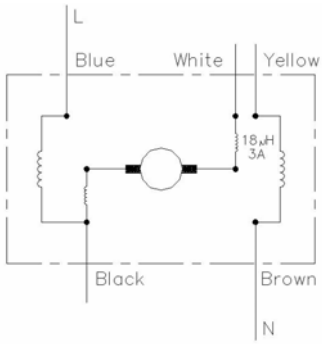

MOTOR TYPE	MOTOR CODE	TEST VOLT. (V)	TEST FREQ. (Hz)	MOTOR PERFORMANCE VALUES													
				At No Load		At Stall		At Maximum Efficiency					At Maximum Power				
				Speed (RPM)	Cur. (Amp)	Torque (Ncm)	Cur. (Amp)	Torque (Ncm)	Speed (RPM)	Cur. (Amp)	Eff. (%)	Pout (W)	Torque (Ncm)	Speed (RPM)	Cur. (Amp)	Eff. (%)	Pout (W)
BM64S	964.94.015	230	50	17637	0.774	102.59	5.598	22.15	10312	2.209	54.25	239.17	59.55	5566	4.365	44.34	347.12

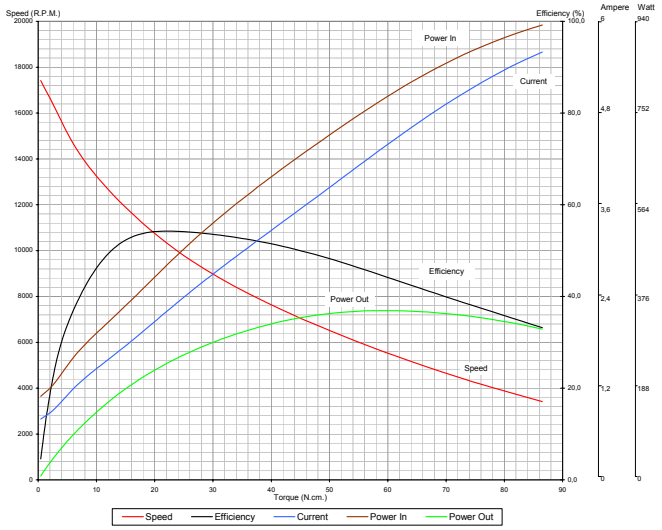

Remarks:
- Documents here includes only reference values.BALKAN MOTOR A.Ş. has the right to revise them without any prior information.
- BALKAN MOTOR A.Ş. could modify all its products according to customer requirements.

BALKAN MOTOR SANAYİ VE TİCARET A.Ş.
Yenibosna Sanayi Caddesi No:21 34530 Bahçelievler/Istanbul/TURKEY
Tel:+90 (212)551 01 00 (7 Lines) Fax: +90 (212) 551 31 67 www.balkanmotor.com e-mail: balkan@balkanmotor.com