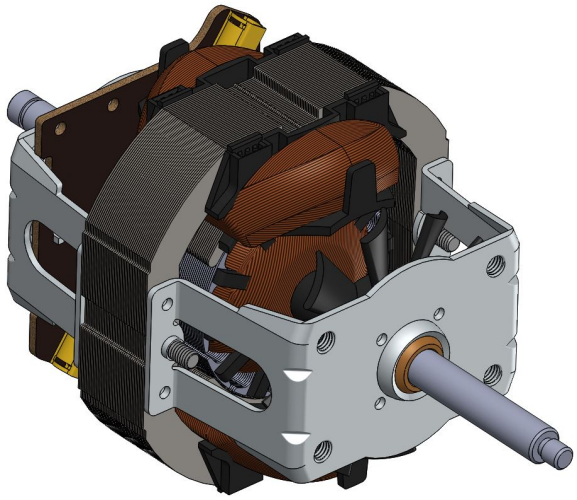

BALKAN MOTOR SANAYİ VE TİCARET A.Ş.
Since 1953

- Protection class: 0
- Insulation class: F
- Motor shaft: Ck 45.
- Bearings: Sinter Bronze.

Universal Motor 230V (BM64B 964.94.002)

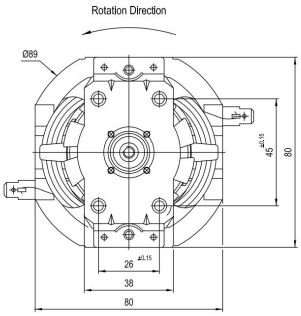

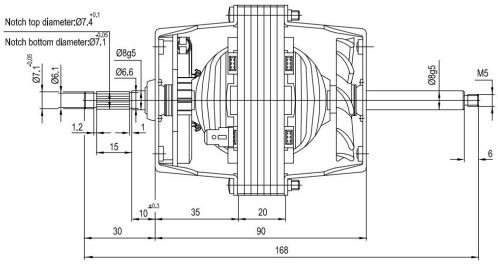

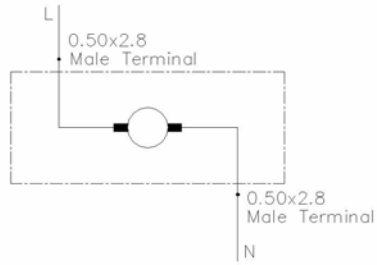

MOTOR TYPE	MOTOR CODE	TEST VOLT. (V)	TEST FREQ. (Hz)	MOTOR PERFORMANCE VALUES													
				At No Load		At Stall		At Maximum Efficiency					At Maximum Power				
				Speed (RPM)	Cur. (Amp)	Torque (Ncm)	Cur. (Amp)	Torque (Ncm)	Speed (RPM)	Cur. (Amp)	Eff. (%)	Pout (W)	Torque (Ncm)	Speed (RPM)	Cur. (Amp)	Eff. (%)	Pout (W)
BM64A	964.94.00	230	50	18455	0.51	74.94	3.92	16.19	9913	1.417	56.15	168.06	40.01	5643	2.747	44.29	236.46

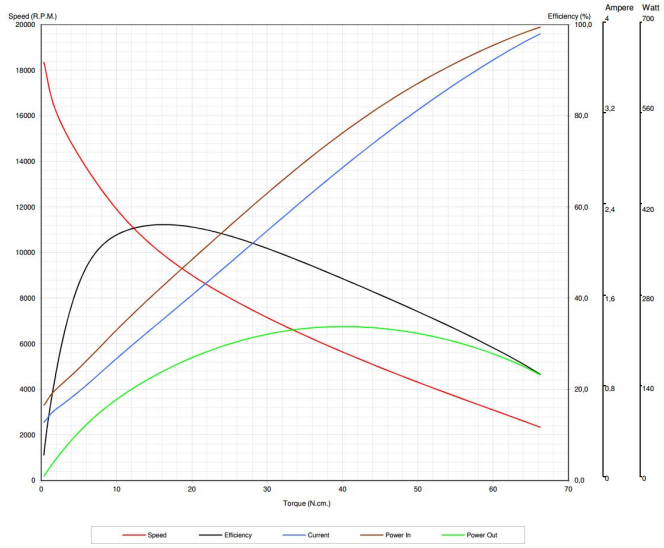

Remarks:
- Documents here includes only reference values.BALKAN MOTOR A.Ş. has the right to revise them without any prior information.
- BALKAN MOTOR A.Ş. could modify all its products according to customer requirements.

BALKAN MOTOR SANAYİ VE TİCARET A.Ş.
Yenibosna Sanayi Caddesi No:21 34530 Bahçelievler/Istanbul/TURKEY
Tel:+90 (212)551 01 00 (7 Lines) Fax: +90 (212) 551 31 67 www.balkanmotor.com e-mail: balkan@balkanmotor.com